PRODUCED BY AN AUTODESK EDUCATIONAL PRODUCT

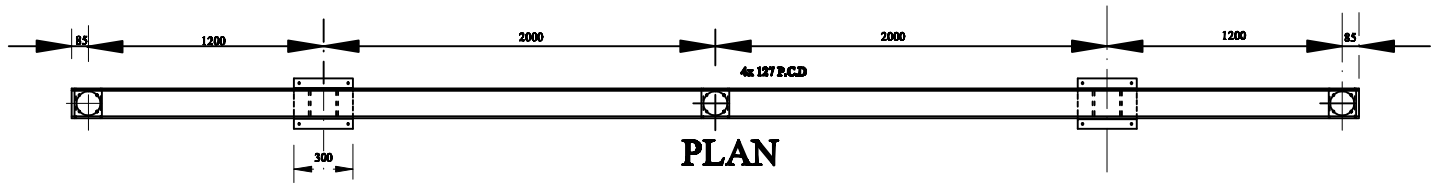

PLAN

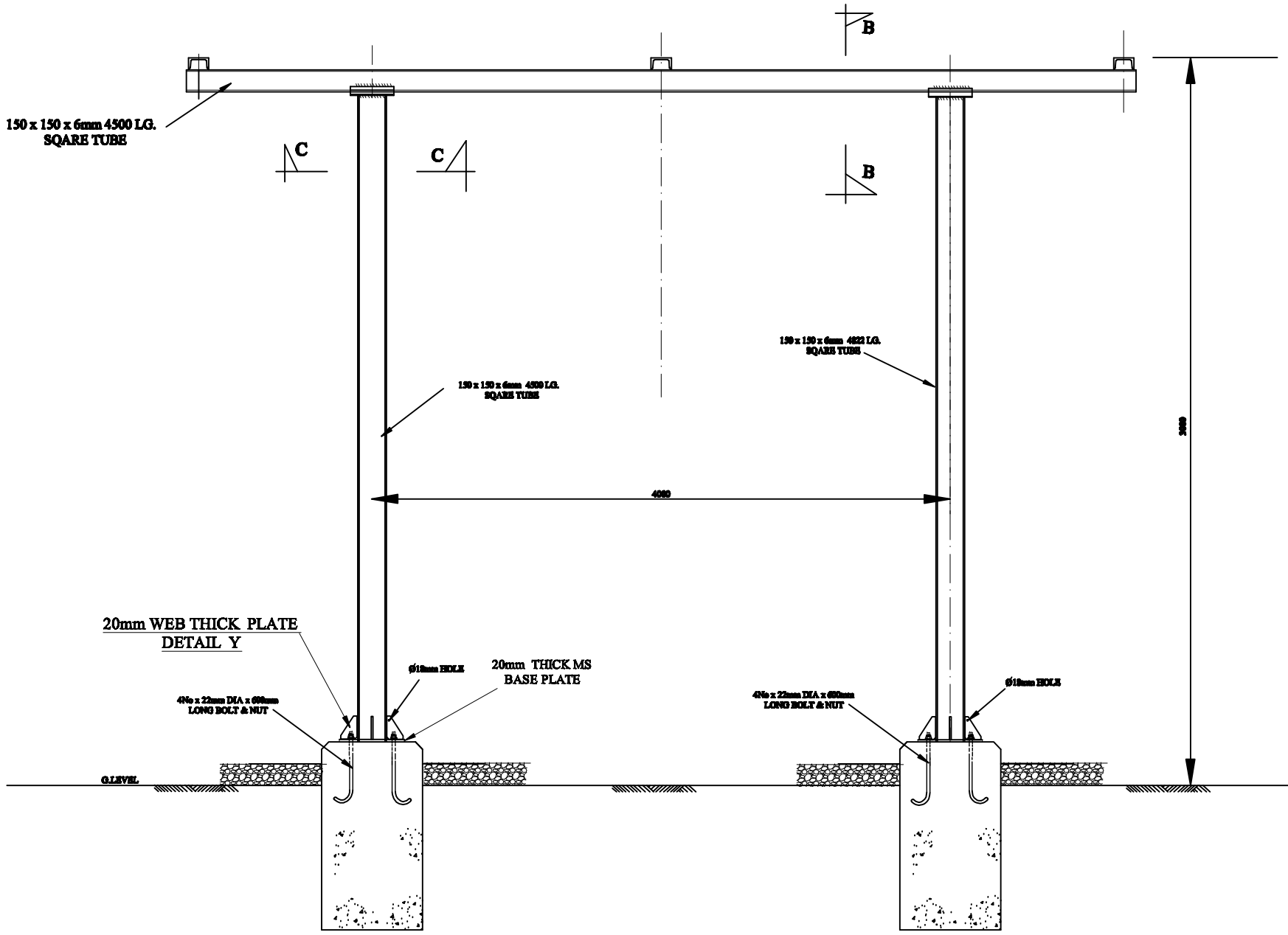

ELEVATION

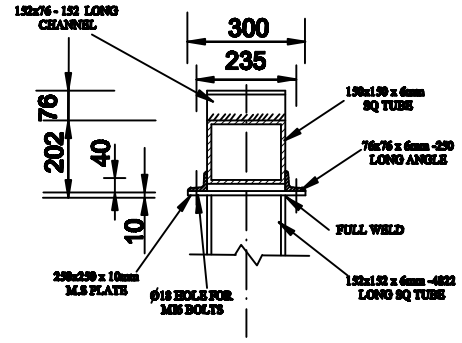

SECTION B-B

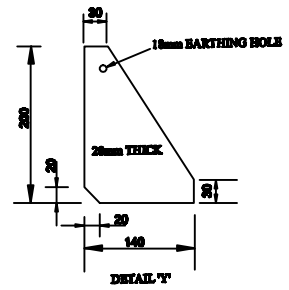

DETAIL 'T'

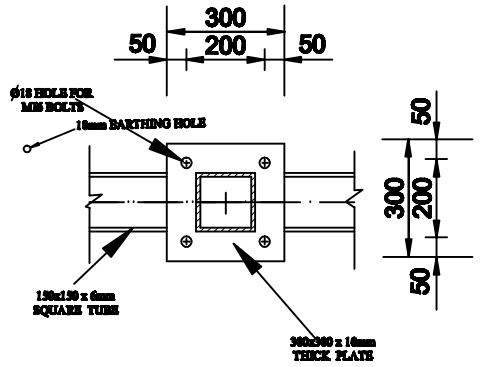

SECTION C-C

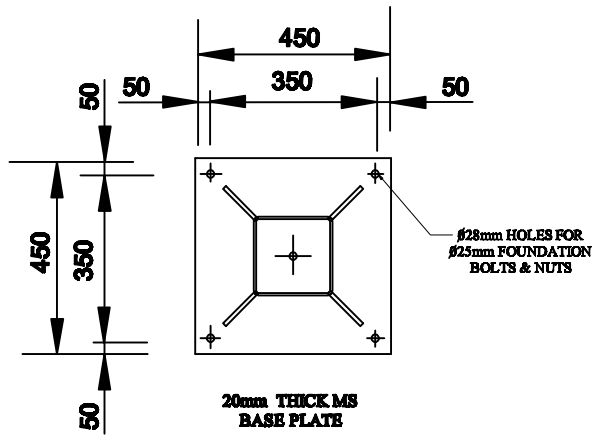

NOTES

1) ALL HOLES TO BE O18 FOR M16 BOLTS UNLESS OTHERWISE STATED .
2) ALL STEELWORK TO BE FREE FROM RUST, RUST, DUST BURRS E.T.C THEN GALVANISED BY HOT DIP. PROCESS, THICKNESS AND QUALITY OF ZINC COATING TO WITHSTAND TEST OF 729.
3) ALL BOLTS& NUTS CONNECTING EQUIPMENT TO BE SUPPLIED BY EQUIPMENT MANUFACTURERS.
4) BOLTS & NUTS TO CONFORM TO BSS 916 AND THE QUANTITY SUPPLIED TO INCLUDE 10% SPARE ALLOWANCE.
5). FABRICATORS ARE TO DESIGNATE ALL STEELWORK ITEMS AND PROVIDE ERECTION MARK PLANS.

SHEET 4C

	NAME	DATE	SIGN
APPROVED			
CHECKED ENGINEER I/C			
CHECKED PRINCIPAL D/MAN			
DRAWN		3/07/2010	
TRACED			

SCALE 1:50

REF	REVISION	DATE	SIGN	CHECKED	DATE
1					
2					
3					
4					
5					
6					

DETAILS OF 132KV POST INSULATOR STRUUCTURE

K. P.& L Co. Ltd.

SK. No. 09162/A

PRODUCED BY AN AUTODESK EDUCATIONAL PRODUCT

PRODUCED BY AN AUTODESK EDUCATIONAL PRODUCT

PRODUCED BY AN AUTODESK EDUCATIONAL PRODUCT